7 Parts and diagrams

Chapter contents

- Order parts, accessories, and supplies
- Part numbers
- Covers
- Internal components
- Tray 2 pickup assembly
- Alphabetical parts list
- Numerical parts list

Order parts, accessories, and supplies

Several methods are available for ordering parts, supplies, and accessories:

- Order directly from HP
- Order through service or support providers
- Order directly through the embedded Web server (for printers that are connected to a network)
- Order directly through the HP Easy Printer Care software

Order directly from HP

You can obtain the following items directly from HP:

- **Replacement parts:** To order replacement parts in the U.S., go to www.hp.com/go/hpparts. Outside the United States, order parts by contacting your local authorized HP service center.
- **Supplies and accessories:** To order supplies in the U.S., go to www.hp.com/go/ljsupplies. To order supplies worldwide, go to www.hp.com/ghp/buyonline.html. To order accessories, go to www.hp.com/support/LJP3005.

Order through service or support providers

To order a part or accessory, contact an HP-authorized service or support provider.

Order directly through the embedded Web server (for printers that are connected to a network)

Use the following steps to order printing supplies directly through the embedded Web server.

1. In the Web browser on the computer, type the IP address or host name of the device. The status window opens.
2. In the **Other links** area, double-click **Order Supplies**. This provides a URL for a site from which you can purchase consumables.
3. Select the part numbers that you want to order, and follow the instructions on the screen.

Order directly through the HP Easy Printer Care software

HP Easy Printer Care software is a printer management tool designed to make printer configuration, monitoring, supplies ordering, troubleshooting, and updating as simple and efficient as possible. For more information about HP Easy Printer Care software, go to www.hp.com/go/easyprintercare.

Part numbers

The following list of accessories was current at the time of printing. Ordering information and availability of the accessories might change during the life of the device.

Paper-handling accessories

Item	Description	Part number
Optional 500-sheet tray and feeder unit (tray 3)	Optional tray to increase paper capacity. Holds Letter, A4, Legal, A5, B5 (JIS), Executive, and 8.5 x 13 paper sizes. Note: This tray is included with the HP LaserJet P3005x model.	Q7817A

Print cartridge

Item	Description	Part number
HP LaserJet print cartridge	6,500-page cartridge	Q7551A
HP LaserJet print cartridge	13,000–page cartridge	Q7551X

Memory

Item	Description	Part number
144-pin 133MHz DDR2 DIMM Boosts the ability of the device to handle large or complex print jobs.	32 MB	CB420A
	64 MB	CB421A
	128 MB	CB422A
	256 MB	CB423A

Cables and interfaces

Item	Description	Part number
Enhanced I/O (EIO) cards HP Jetdirect print server multi-protocol EIO network cards:	HP Jetdirect 620n Fast Ethernet (10/100Base-TX) print server	J7934A
	HP Jetdirect 625n Gigabit Ethernet (10/100/1000T) print server	J7960A
	HP Jetdirect 635n IPv6/IPsec print server	J7961A
	HP Jetdirect 680n 802.11b wireless internal print server HP Jetdirect 680n 802.11b wireless internal print server	J6058A
	HP bt1300 Bluetooth wireless printer adapter	J6072A
Parallel cables	2-meter IEEE 1284-B cable	C2950A
	3-meter IEEE 1284-B cable	C2951A
USB cable	2-meter A to B cable	C6518A

Covers

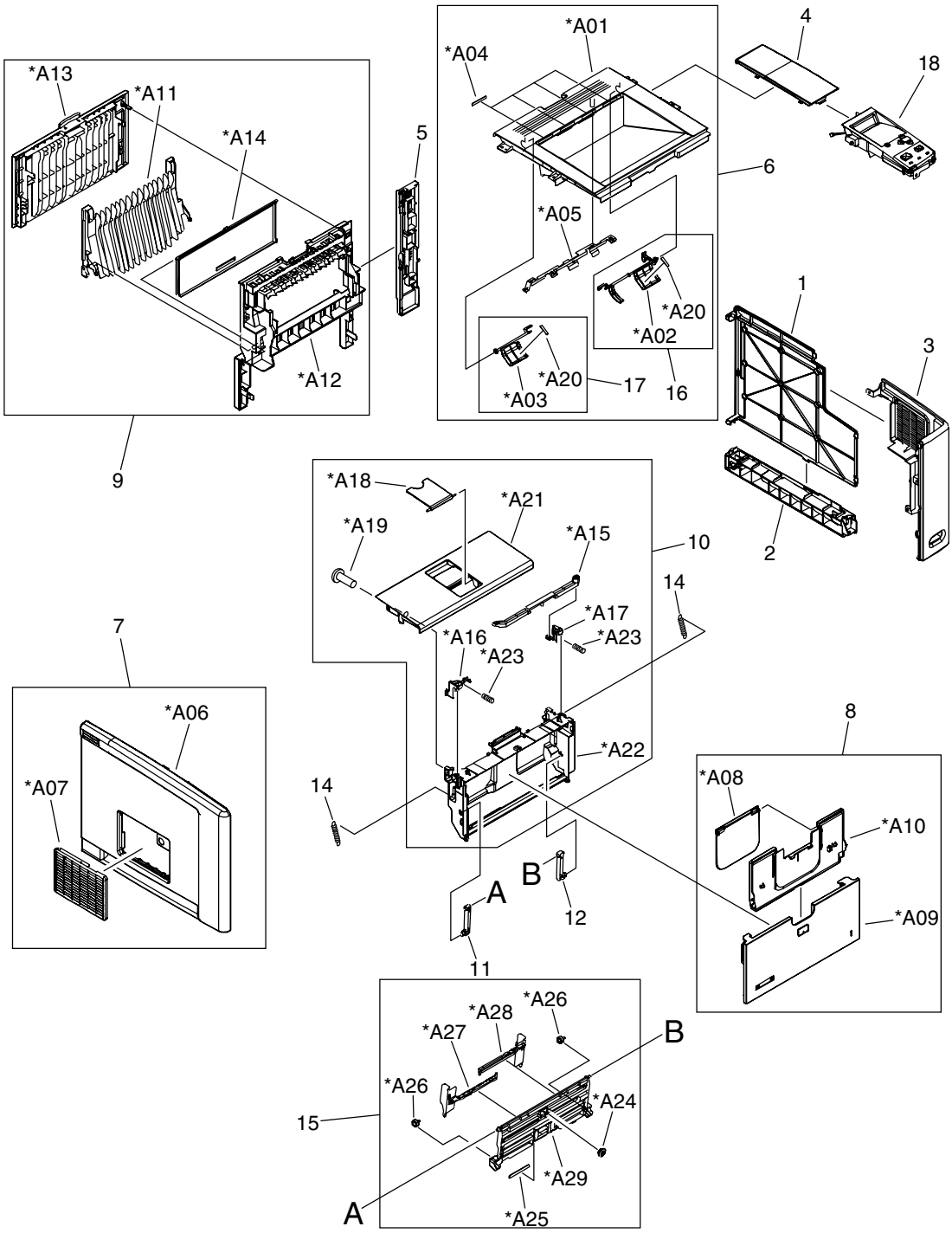

Figure 7-1 Covers

Table 7-1 Covers

Ref	Description	Part number	Qty
1	Cover, DIMM	RC2-0602-000	1
2	Cover, right lower	RC2-0603-000	1
3	Cover, right front	RL1-1367-000	1
4	Cover, right upper	RC2-0605-000	1
5	Cover, engine controller	RC2-0612-000	1
6	Top cover assembly	RM1-3720-000	1
7	Left cover assembly	RM1-3721-000	1
8	Multipurpose cover assembly	RM1-3723-000	1
9	Rear cover assembly	RM1-3724-000	1
10	Cartridge-door assembly	RM1-3722-000	1
11	Hinge, left	RC1-4057-000	1
12	Hinge, right	RC1-4058-000	1
14	Spring, tension	RU5-2388-000	2
15	Multipurpose tray assembly	RM1-1490-000	1
16	Face down full flag, right	RM1-3742-000	1
17	Face down full flag, left	RM1-3743-000	1
18	Control-panel assembly	RM1-3725-000	1

Internal components

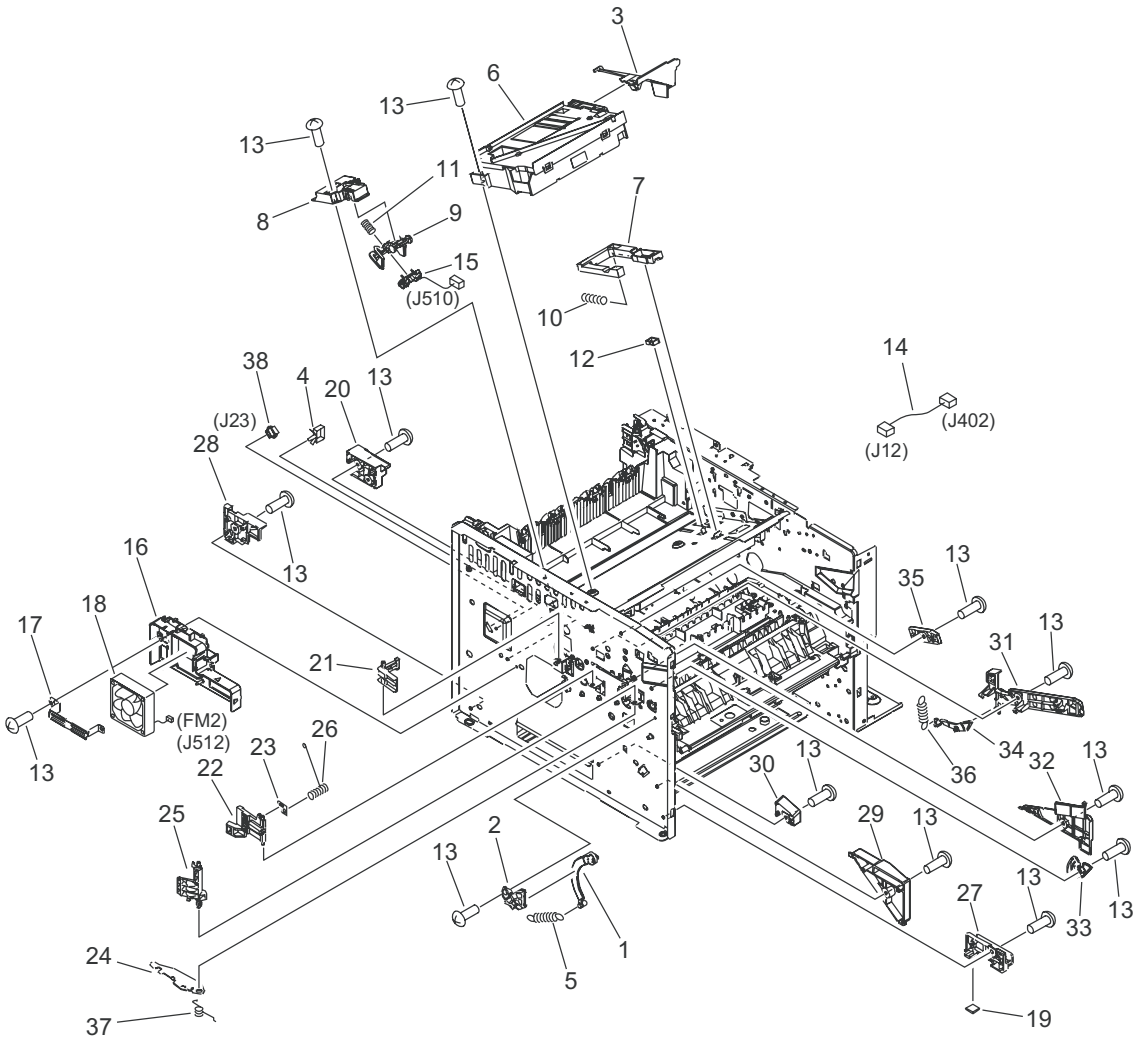

Figure 7-2 Internal components (1 of 6)

Table 7-2 Internal components (1 of 6)

Ref	Description	Part number	Qty
1	Arm, door	RC1-4055-000	1
2	Glide, door	RC1-4056-000	1
3	Duct, scanner	RC1-4128-020	1
4	Saddle, wire	WT2-5694-000	1
5	Spring, tension	RU5-2407-000	1
6	Laser/scanner assembly	RM1-1521-030	1
7	Link, laser shutter	RC1-4125-000	1
8	Stay, tag holder	RC1-4126-000	1
9	Holder, tag	RC1-4127-000	1
10	Spring, compression	RU5-2404-000	1
11	Spring, compression	RU5-2405-000	1
12	Clip, cable	WT2-5812-000	1
13	Screw, D, M3x8	XA9-1671-000	13
14	Cable, scanner motor	RM1-4053-000	1
15	Cable, memory tag	RM1-4054-000	1
16	Holder, fan, left	RC2-0622-000	1
17	Plate, fan shield, left	RC2-0623-000	1
18	Fan, left	RK2-1499-000	1
19	Foot, rubber	RA0-1003-000	1
20	Holder	RC1-4009-000	1
21	Lever, grounding contact	RC1-4065-000	1
22	Lever, grounding contact	RC1-4066-020	1
23	Spring, leaf	RC1-4067-000	1
24	Plate, protective	RC1-4136-000	1
25	Cam, contact	RC1-4137-020	1
26	Spring, compression	RC1-4140-000	1
27	Guide, cassette, front left	RC2-0565-000	1
28	Guide, cassette, rear left	RC2-0566-000	1
29	Guide, centerplate, left	RC2-0567-000	1
30	Stopper, feed guide, left	RC2-0585-000	1
31	Guide, cartridge upper, left	RC2-0703-000	1
32	Guide, cartridge lower, left	RC2-0704-000	1
33	Lever, drive release	RC2-0705-000	1
34	Lever, cartridge clamp	RC2-0706-000	1

Ref	Description	Part number	Qty
35	Stopper, cartridge, left	RC2-0707-000	1
36	Spring, tension	RU5-2403-000	1
37	Spring, torsion	RU5-2410-020	1
38	Connector, snap tight, bk	VS1-7177-003	1

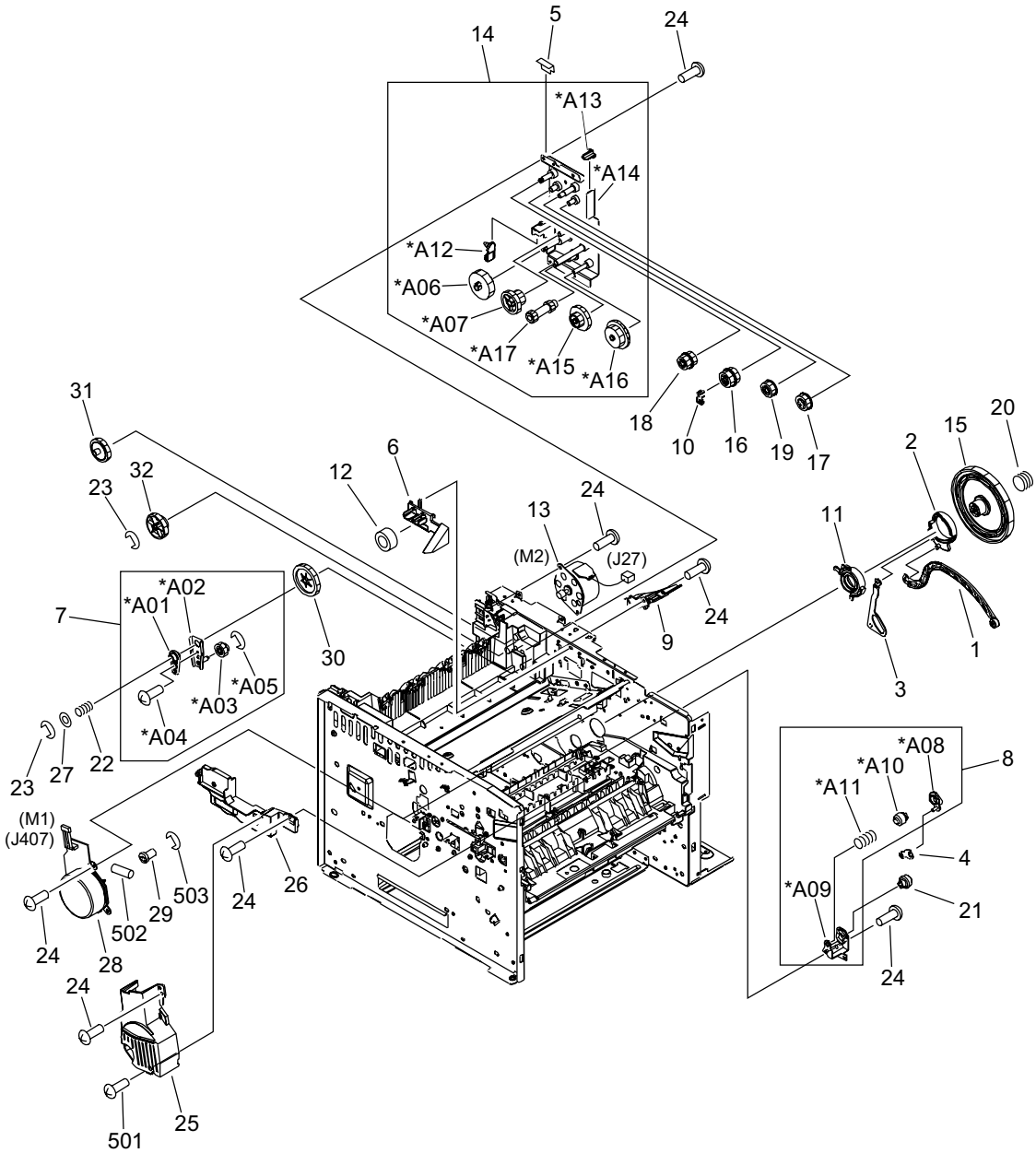

Figure 7-3 Internal components (2 of 6)

Table 7-3 Internal components (2 of 6)

Ref	Description	Part number	Qty
1	Lever, coupling	RC1-4115-000	1
2	Cam	RC1-4114-000	1
3	Lever, drive release	RC1-4116-000	1
4	Link, drive release	RC1-4117-000	1
5	Film, fuser drive side plate	RC2-0649-000	1
6	Duct, cartridge	RC2-0590-000	1
7	Pendulum assembly	RM1-3748-000	1
8	Drive release assembly	RM1-1522-000	1
9	Guide, air	RC2-0648-000	1
10	Stopper, fuser thrust	RC2-0657-000	1
11	Bushing, inner	RC2-0701-000	1
12	Ferrite core	WE8-5516-000	1
13	Motor, DC, stepping (M2), fusing	RK2-1489-000	1
14	Fuser drive assembly	RM1-3746-000	1
15	Gear, 201T	RU5-0950-000	1
16	Gear, 20T/20T	RU5-0956-000	1
17	Gear, 20T	RU5-0957-000	1
18	Gear, 17T/17T	RU5-0958-000	1
19	Gear, 19T	RU5-0959-000	1
20	Spring, compression	RU5-2401-000	1
21	Gear, 12T	RU5-0394-000	1
22	Spring, compression	RU5-2920-000	1
23	Ring, E	XD2-1100-402	2
24	Screw, D, M3x8	XA9-1671-000	30
25	Cover, main motor	RC1-4108-000	1
26	Cover, gear	RC2-0579-000	1
27	Washer, plain	RC2-0652-000	1
28	Motor, DC (M1), main	RK2-1488-000	1
29	Gear, 16T	RU5-0951-000	1
30	Gear, 43T	RU5-0955-000	1
31	Gear, 31T	RU5-0960-000	1
32	Gear, 65T	RU5-0962-000	1
501	Screw, tapping, truss head, M4x10	XB4-7401-005	1

Ref	Description	Part number	Qty
502	Pin, dowel	XD3-2120-122	1
503	Ring, E	XD2-1200-802	1

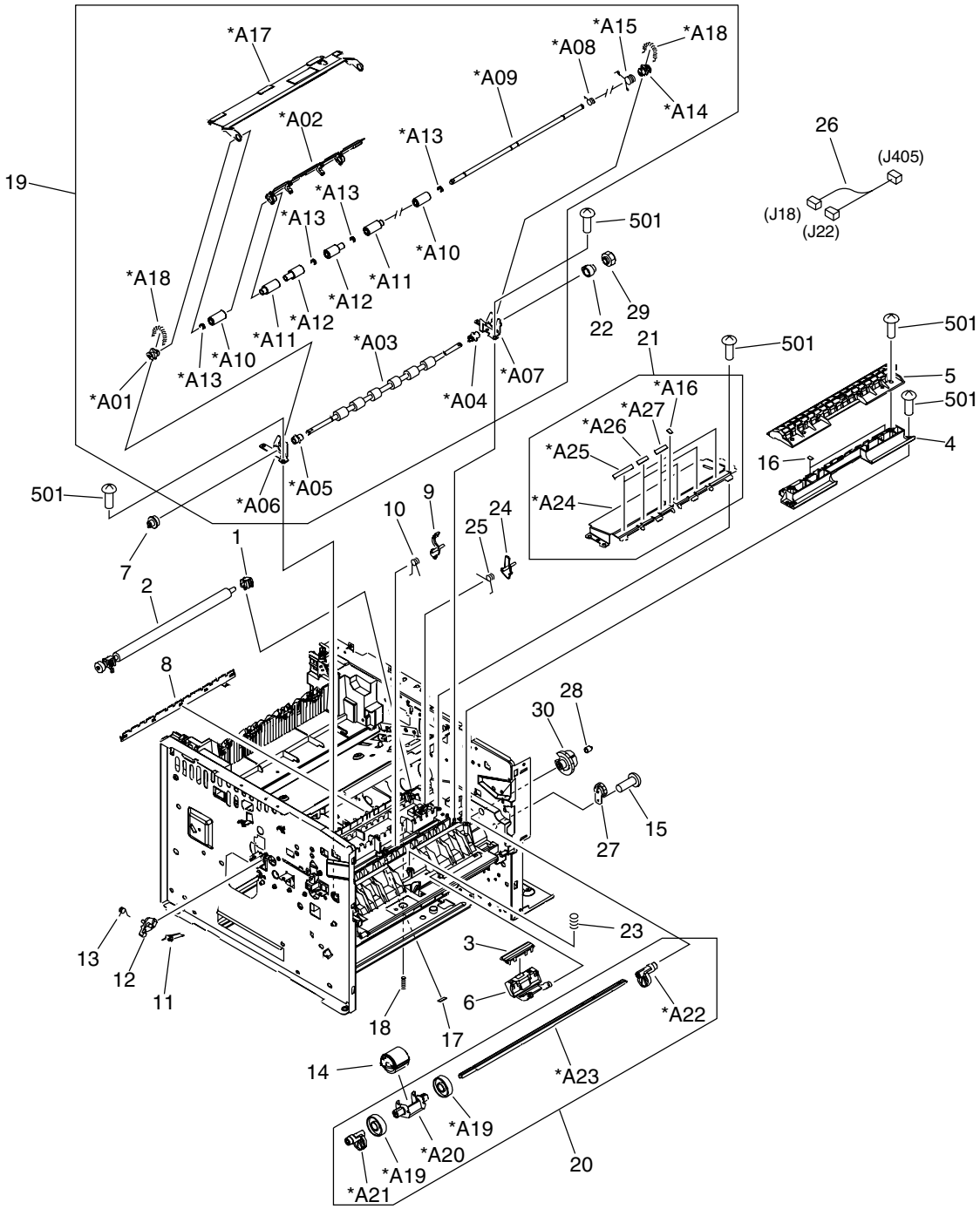

Figure 7-4 Internal components (3 of 6)

Table 7-4 Internal components (3 of 6)

Ref	Description	Part number	Qty
1	Bushing, transfer, right	RC1-0922-000	1
2	Transfer roller assembly	RM1-1508-000	1
3	Pad, separation, multipurpose tray	RC1-0939-000	1
4	Guide, feed	RC1-3935-000	1
5	Cover, registration	RC1-3936-020	1
6	Arm, pad	RC1-3937-000	1
7	Gear, 12T	RU5-0400-000	1
8	Eliminator, static charge	RC1-4025-000	1
9	Lever, sensor	RC1-4027-000	1
10	Spring, torsion	RC1-4028-000	1
11	Spring, torsion	RC1-4059-000	1
12	Lever	RC1-4060-000	1
13	Spring, torsion	RC1-4061-000	1
14	Roller, multipurpose pick-up	RL1-0568-000	1
15	Screw, D, M3x8	XA9-1671-000	1
16	Sheet, static charge	RC1-4069-000	2
17	Sheet, static charge	RC1-4070-000	1
18	Spring, compression	RU5-2408-000	1
19	Registration assembly	RM1-3715-000	1
20	Multipurpose paper pick-up roller assembly	RM1-3716-000	1
21	Lower transfer guide assembly	RM1-3757-000	1
22	Stopper, gear	RC1-4189-000	1
23	Spring, compression	RU5-2385-000	1
24	Arm, paper-width sensor	RC2-0575-000	1
25	Spring, torsion	RC2-0576-000	1
26	Cable, paper delivery sensor	RM1-4057-000	1
27	Gear, 17T	RA0-1172-000	1
28	Spring, compression	RC2-0483-000	1
29	Gear, 14T	RU5-0409-000	1
30	Gear, 30T	RU5-0366-000	1
501	Screw, tapping, truss head, M4x10	XB4-7401-005	9

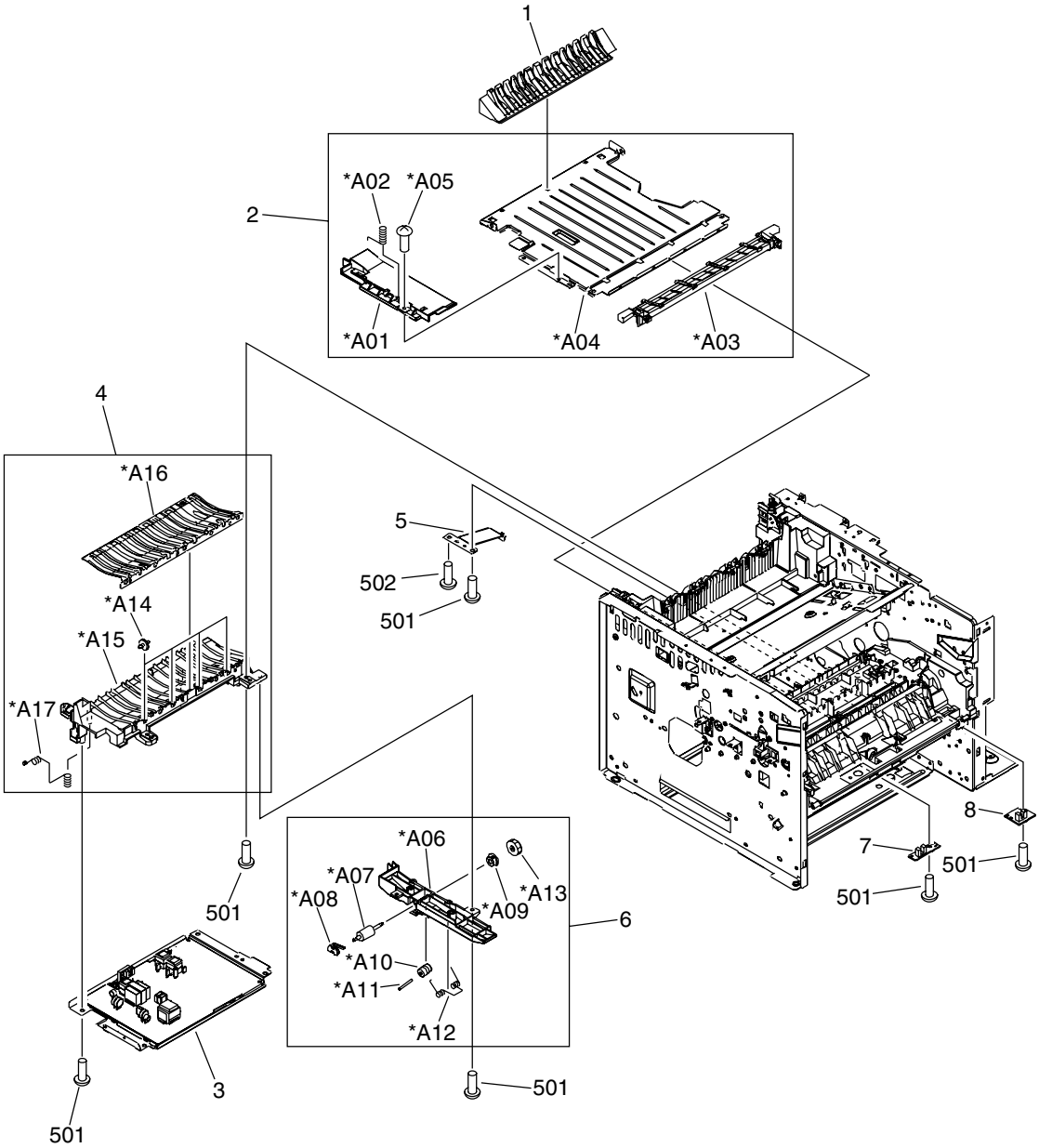

Figure 7-5 Internal components (4 of 6)

Table 7-5 Internal components (4 of 6)

Ref	Description	Part number	Qty
1	Guide, duplex inlet	RC1-4096-000	1
2	Lower paper feed assembly	RM1-3759-000	1
3	High-voltage PCA	RM1-3758-000	1
4	Paper feed guide assembly	RM1-3760-000	1
5	Plate, grounding	RC1-4085-000	1
6	Oblique roller assembly	RM1-1506-000	1
7	Top sensor PCA (PS901)	RM1-4040-000	1
8	Paper-width sensor PCA (PS903)	RM1-4042-000	1
501	Screw, tapping, truss head, M4x10	XB4-7401-005	7
502	Screw, with washer, M3x6	XB2-7300-605	1

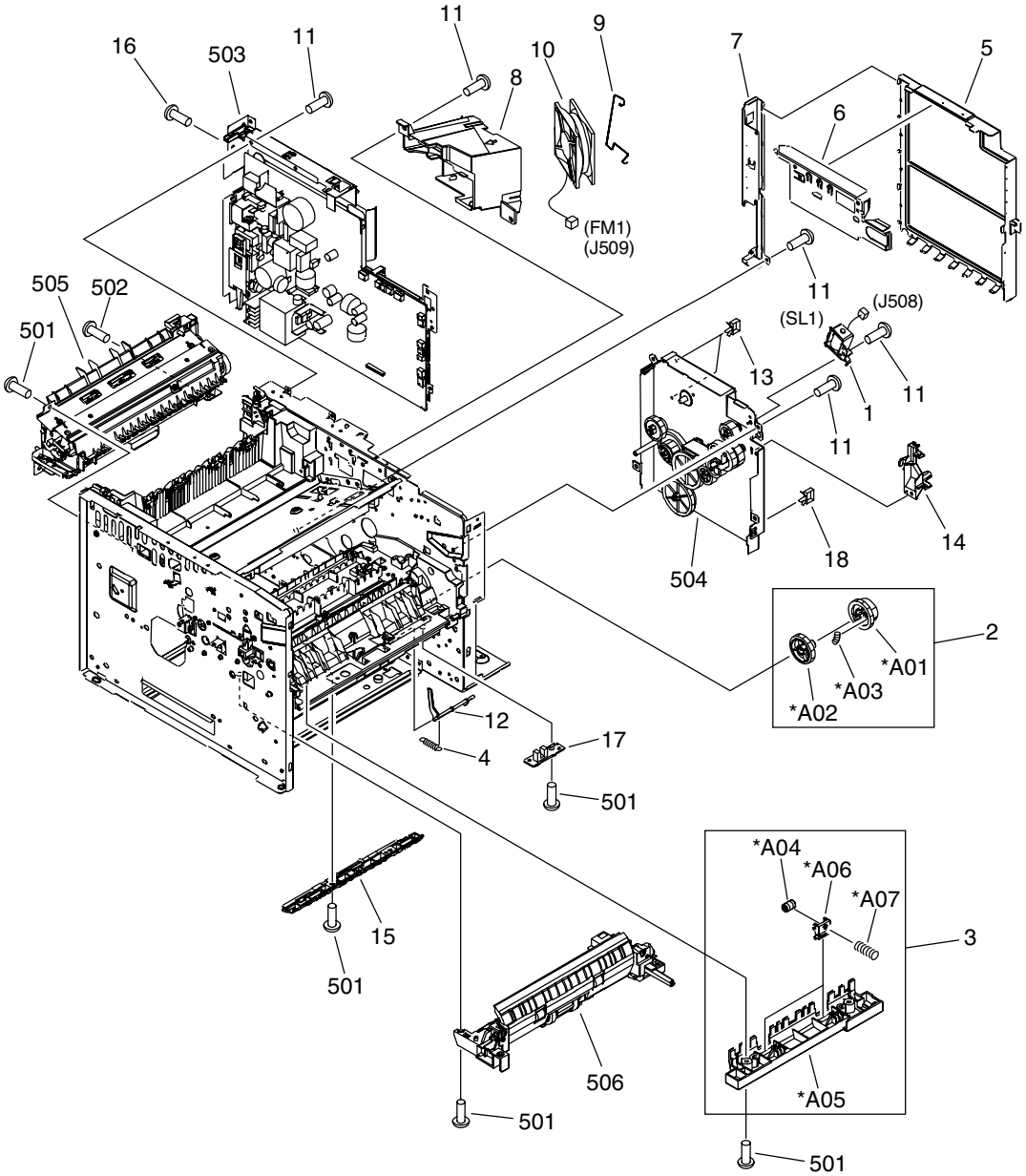

Figure 7-6 Internal components (5 of 6)

Table 7-6 Internal components (5 of 6)

Ref	Description	Part number	Qty
1	Solenoid, tray 1 (SL1)	RK2-1490-000	1
2	Pick-up roller gear assembly	RM1-3714-000	1
3	roller stay assembly	RM1-1485-000	1
4	Spring, torsion	RU5-2386-000	1
5	Cover, formatter	RC2-0627-000	1
6	Plate, anti-magnetic	RC2-0628-000	1
7	Plate, inlet/outlet (non-network models)	RC2-0638-000	1
7	Plate, inlet/outlet (network models)	RC2-0629-000	1
8	Holder, fan	RC2-0592-000	1
9	Static wire, fan	RC2-0593-000	1
10	Fan, right (FM1)	RK2-1497-000	1
11	Screw, D, M3x8	XA9-1671-000	15
12	Lever, sensor	RC1-3939-000	1
13	Saddle, wire	WT2-5694-000	2
14	Holder, cable	RC2-0588-000	1
15	Guide	RC1-4083-000	1
16	Screw, tap, M3x6	XA9-1503-000	18
17	Multipurpose sensor PCA (PS3)	RM1-4041-000	1
18	Clip, cable	WT2-5678-000	1
501	Screw, tapping, truss head, M4x10	XB4-7401-005	10
502	Screw, with washer, M3x6	XB2-7300-605	1
503	Engine controller assembly — 110–127V	RM1-3730-000	1
503	Engine controller assembly — 220–240V	RM1-3731-000	1
504	Main drive assembly	RM1-3712-000	1
505	Fuser assembly (110-127V)	RM1-3740-000	1
505	Fuser assembly (220-240V)	RM1-3741-000	1
506	Paper pick-up assembly	RM1-3762-000	1

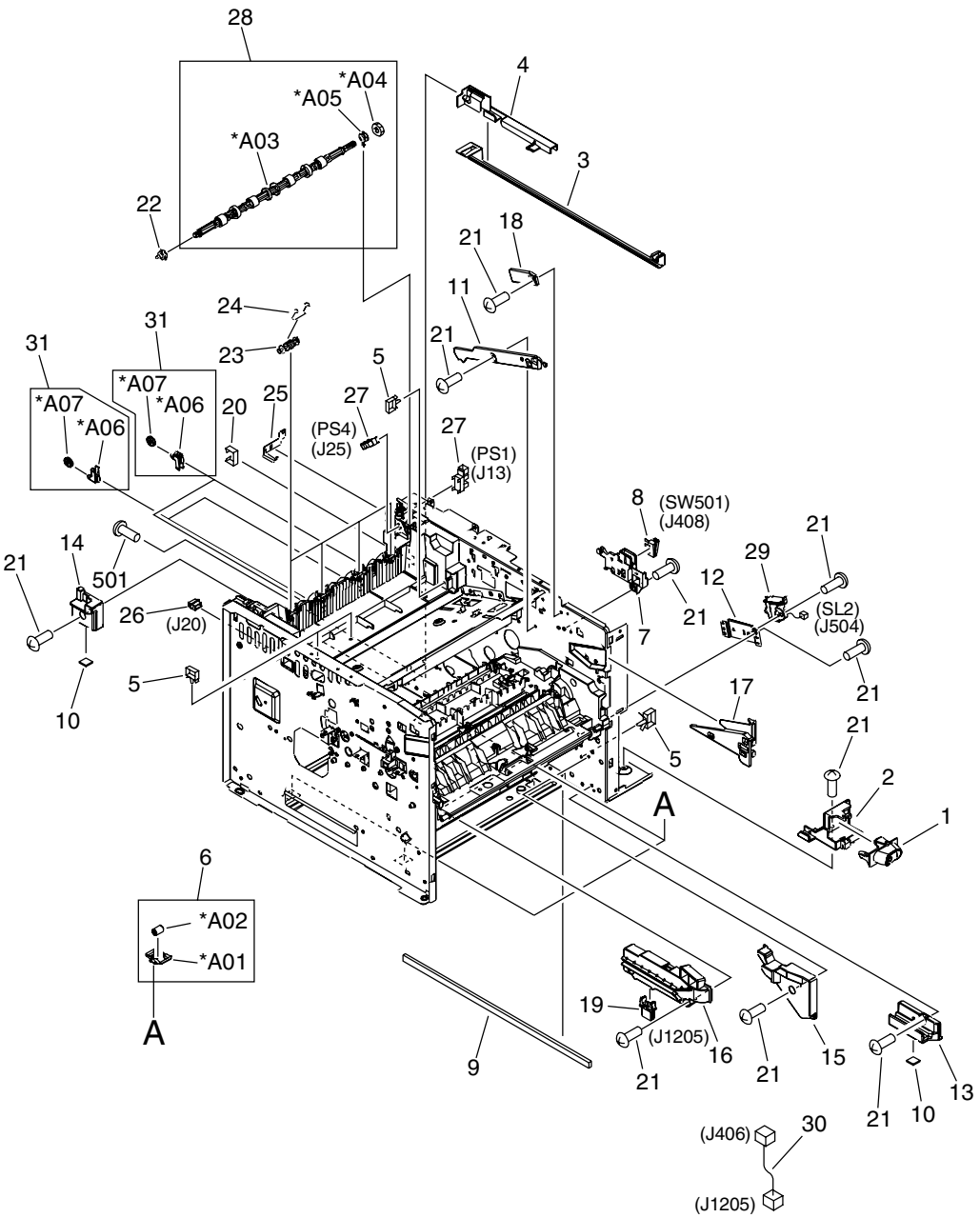

Figure 7-7 Internal components (6 of 6)

Table 7-7 Internal components (6 of 6)

Ref	Description	Part number	Qty
1	Switch, front	RC2-0631-000	1
2	Holder, switch	RC2-0632-000	1
3	Link, switch	RC2-0633-000	1
4	Holder, switch link	RC2-0634-000	1
5	Clip, cable	WT2-5678-000	4
6	Bottom plate roller assembly	RM1-3727-000	4
7	Holder, interlock	RC2-0595-000	1
8	Microswitch (SW501), door	RK2-0534-000	1
9	Cushion, right lower	RC2-0468-000	1
10	Foot, rubber	RA0-1003-000	2
11	Guide, cartridge upper, right	RC2-0492-000	1
12	Mount, solenoid	RC2-0498-000	1
13	Guide, cassette, front right	RC2-0559-000	1
14	Guide, cassette, rear right	RC2-0560-000	1
15	Guide, center plate, right	RC2-0561-000	1
16	Holder, option connector	RC2-0562-000	1
17	Guide, cartridge lower, right	RC2-0700-000	1
18	Stopper, cartridge, right	RC2-0702-000	1
19	Connector, drawer	VS1-7257-007	1
20	Clip, cable	WT2-5056-000	1
21	Screw, D, M3x8	XA9-1671-000	14
22	Bushing	RC1-3665-000	1
23	Roller, face-down	RC1-3994-000	4
24	Spring, torsion	RC2-0665-000	4
25	Plate, face-up shield	RC2-0697-000	1
26	Connector, snap tight, bk	VS1-7177-004	1
27	IC, photo interrupter (PS1)	WG8-5624-000	2
28	Face-down roller assembly	RM1-3749-000	1
29	Solenoid (SL2)	RK2-1492-000	1
30	Cable, option interface	RM1-4062-000	1
31	Delivery roller assembly	RM1-1497-000	4
501	Screw, tapping, truss head, M4x10	XB4-7401-005	1

Tray 2 pickup assembly

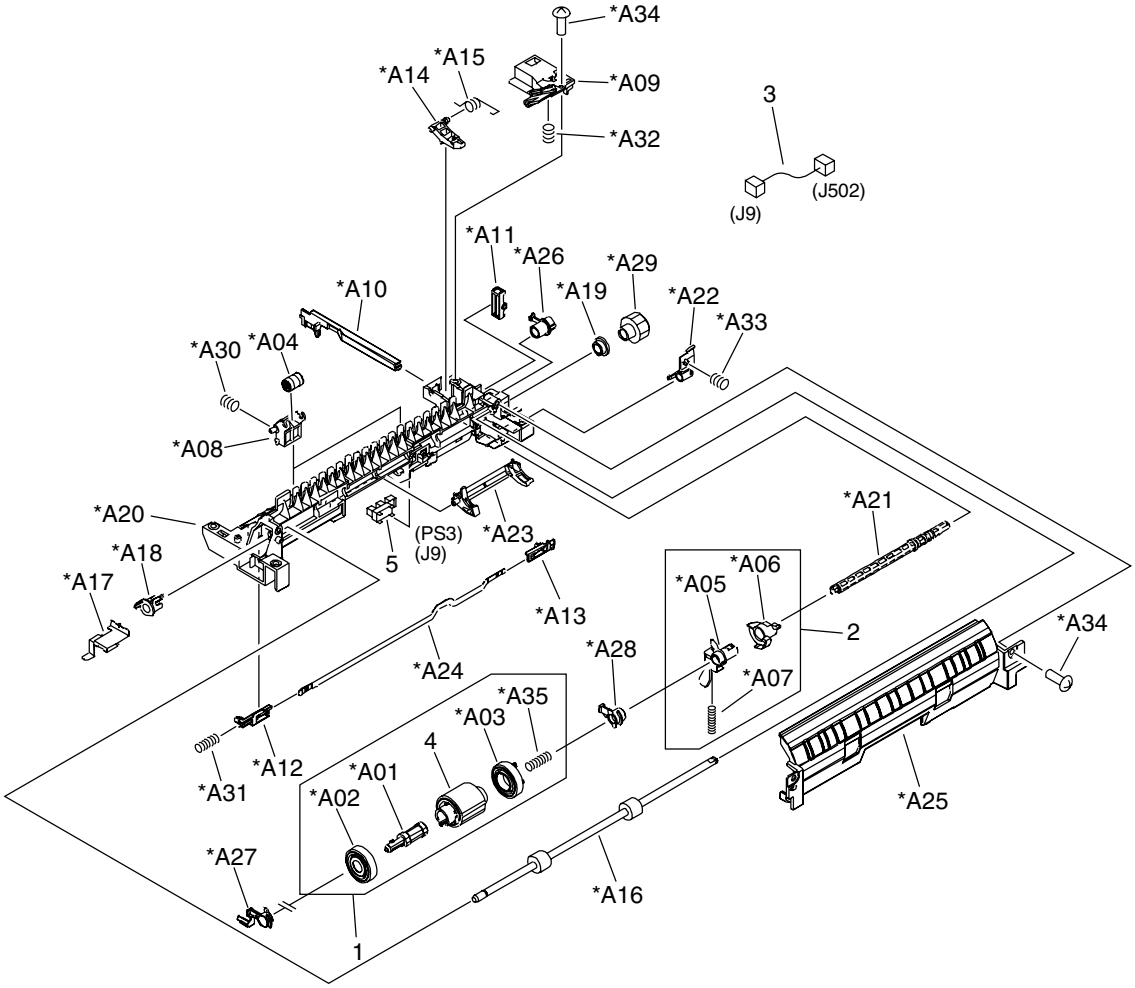

Figure 7-8 Tray 2 pickup assembly

Table 7-8 Tray 2 pickup assembly

Ref	Description	Part number	Qty
	Tray 2 pickup assembly	RM1-3762-000	1
1	Tray 2 pickup roller assembly	RM1-3763-000	1
2	Sensor-flag assembly	RM1-3769-000	1
3	Cable, tray 2 sensor	RM1-4060-000	1
4	Roller, tray 2 paper pickup	RL1-1370-000	1
5	IC, photo interrupter (PS3)	WG8-5624-000	1

Alphabetical parts list

Table 7-9 Alphabetical parts list

Description	Part number	Table and page
Arm, door	RC1-4055-000	Internal components (1 of 6) on page 207
Arm, pad	RC1-3937-000	Internal components (3 of 6) on page 215
Arm, paper-width sensor	RC2-0575-000	Internal components (3 of 6) on page 215
Bottom plate roller assembly	RM1-3727-000	Internal components (6 of 6) on page 221
Bushing	RC1-3665-000	Internal components (6 of 6) on page 221
Bushing, inner	RC2-0701-000	Internal components (2 of 6) on page 211
Bushing, transfer, right	RC1-0922-000	Internal components (3 of 6) on page 215
Cable, memory tag	RM1-4054-000	Internal components (1 of 6) on page 207
Cable, option interface	RM1-4062-000	Internal components (6 of 6) on page 221
Cable, paper delivery sensor	RM1-4057-000	Internal components (3 of 6) on page 215
Cable, scanner motor	RM1-4053-000	Internal components (1 of 6) on page 207
Cable, tray 2 sensor	RM1-4060-000	Tray 2 pickup assembly on page 223
Cam	RC1-4114-000	Internal components (2 of 6) on page 211
Cam, contact	RC1-4137-020	Internal components (1 of 6) on page 207
Cartridge-door assembly	RM1-3722-000	Covers on page 205
Clip, cable	WT2-5812-000	Internal components (1 of 6) on page 207
Clip, cable	WT2-5678-000	Internal components (5 of 6) on page 219
Clip, cable	WT2-5678-000	Internal components (6 of 6) on page 221
Clip, cable	WT2-5056-000	Internal components (6 of 6) on page 221
Connector, drawer	VS1-7257-007	Internal components (6 of 6) on page 221
Connector, snap tight, bk	VS1-7177-003	Internal components (1 of 6) on page 207

Table 7-9 Alphabetical parts list (continued)

Description	Part number	Table and page
Connector, snap tight, bk	VS1-7177-004	Internal components (6 of 6) on page 221
Control-panel assembly	RM1-3725-000	Covers on page 205
Cover, DIMM	RC2-0602-000	Covers on page 205
Cover, engine controller	RC2-0612-000	Covers on page 205
Cover, formatter	RC2-0627-000	Internal components (5 of 6) on page 219
Cover, gear	RC2-0579-000	Internal components (2 of 6) on page 211
Cover, main motor	RC1-4108-000	Internal components (2 of 6) on page 211
Cover, registration	RC1-3936-020	Internal components (3 of 6) on page 215
Cover, right front	RL1-1367-000	Covers on page 205
Cover, right lower	RC2-0603-000	Covers on page 205
Cover, right upper	RC2-0605-000	Covers on page 205
Cushion, right lower	RC2-0468-000	Internal components (6 of 6) on page 221
Delivery roller assembly	RM1-1497-000	Internal components (6 of 6) on page 221
Drive release assembly	RM1-1522-000	Internal components (2 of 6) on page 211
Duct, cartridge	RC2-0590-000	Internal components (2 of 6) on page 211
Duct, scanner	RC1-4128-020	Internal components (1 of 6) on page 207
Eliminator, static charge	RC1-4025-000	Internal components (3 of 6) on page 215
Engine controller assembly — 110–127V	RM1-3730-000	Internal components (5 of 6) on page 219
Engine controller assembly — 220–240V	RM1-3731-000	Internal components (5 of 6) on page 219
Face down full flag, left	RM1-3743-000	Covers on page 205
Face down full flag, right	RM1-3742-000	Covers on page 205
Face-down roller assembly	RM1-3749-000	Internal components (6 of 6) on page 221
Fan, left	RK2-1499-000	Internal components (1 of 6) on page 207
Fan, right (FM1)	RK2-1497-000	Internal components (5 of 6) on page 219
Ferrite core	WE8-5516-000	Internal components (2 of 6) on page 211

Table 7-9 Alphabetical parts list (continued)

Description	Part number	Table and page
Film, fuser drive side plate	RC2-0649-000	Internal components (2 of 6) on page 211
Foot, rubber	RA0-1003-000	Internal components (1 of 6) on page 207
Foot, rubber	RA0-1003-000	Internal components (6 of 6) on page 221
Fuser assembly (110-127V)	RM1-3740-000	Internal components (5 of 6) on page 219
Fuser assembly (220-240V)	RM1-3741-000	Internal components (5 of 6) on page 219
Fuser drive assembly	RM1-3746-000	Internal components (2 of 6) on page 211
Gear, 12T	RU5-0394-000	Internal components (2 of 6) on page 211
Gear, 12T	RU5-0400-000	Internal components (3 of 6) on page 215
Gear, 14T	RU5-0409-000	Internal components (3 of 6) on page 215
Gear, 16T	RU5-0951-000	Internal components (2 of 6) on page 211
Gear, 17T	RA0-1172-000	Internal components (3 of 6) on page 215
Gear, 17T/17T	RU5-0958-000	Internal components (2 of 6) on page 211
Gear, 19T	RU5-0959-000	Internal components (2 of 6) on page 211
Gear, 201T	RU5-0950-000	Internal components (2 of 6) on page 211
Gear, 20T	RU5-0957-000	Internal components (2 of 6) on page 211
Gear, 20T/20T	RU5-0956-000	Internal components (2 of 6) on page 211
Gear, 30T	RU5-0366-000	Internal components (3 of 6) on page 215
Gear, 31T	RU5-0960-000	Internal components (2 of 6) on page 211
Gear, 43T	RU5-0955-000	Internal components (2 of 6) on page 211
Gear, 65T	RU5-0962-000	Internal components (2 of 6) on page 211
Glide, door	RC1-4056-000	Internal components (1 of 6) on page 207
Guide	RC1-4083-000	Internal components (5 of 6) on page 219

Table 7-9 Alphabetical parts list (continued)

Description	Part number	Table and page
Guide, air	RC2-0648-000	Internal components (2 of 6) on page 211
Guide, cartridge lower, left	RC2-0704-000	Internal components (1 of 6) on page 207
Guide, cartridge lower, right	RC2-0700-000	Internal components (6 of 6) on page 221
Guide, cartridge upper, left	RC2-0703-000	Internal components (1 of 6) on page 207
Guide, cartridge upper, right	RC2-0492-000	Internal components (6 of 6) on page 221
Guide, cassette, front left	RC2-0565-000	Internal components (1 of 6) on page 207
Guide, cassette, front right	RC2-0559-000	Internal components (6 of 6) on page 221
Guide, cassette, rear left	RC2-0566-000	Internal components (1 of 6) on page 207
Guide, cassette, rear right	RC2-0560-000	Internal components (6 of 6) on page 221
Guide, center plate, right	RC2-0561-000	Internal components (6 of 6) on page 221
Guide, centerplate, left	RC2-0567-000	Internal components (1 of 6) on page 207
Guide, duplex inlet	RC1-4096-000	Internal components (4 of 6) on page 217
Guide, feed	RC1-3935-000	Internal components (3 of 6) on page 215
High-voltage PCA	RM1-3758-000	Internal components (4 of 6) on page 217
Hinge, left	RC1-4057-000	Covers on page 205
Hinge, right	RC1-4058-000	Covers on page 205
Holder	RC1-4009-000	Internal components (1 of 6) on page 207
Holder, cable	RC2-0588-000	Internal components (5 of 6) on page 219
Holder, fan	RC2-0592-000	Internal components (5 of 6) on page 219
Holder, fan, left	RC2-0622-000	Internal components (1 of 6) on page 207
Holder, interlock	RC2-0595-000	Internal components (6 of 6) on page 221
Holder, option connector	RC2-0562-000	Internal components (6 of 6) on page 221
Holder, switch	RC2-0632-000	Internal components (6 of 6) on page 221

Table 7-9 Alphabetical parts list (continued)

Description	Part number	Table and page
Holder, switch link	RC2-0634-000	Internal components (6 of 6) on page 221
Holder, tag	RC1-4127-000	Internal components (1 of 6) on page 207
IC, photo interrupter (PS1)	WG8-5624-000	Internal components (6 of 6) on page 221
IC, photo interrupter (PS3)	WG8-5624-000	Tray 2 pickup assembly on page 223
Laser/scanner assembly	RM1-1521-030	Internal components (1 of 6) on page 207
Left cover assembly	RM1-3721-000	Covers on page 205
Lever	RC1-4060-000	Internal components (3 of 6) on page 215
Lever, cartridge clamp	RC2-0706-000	Internal components (1 of 6) on page 207
Lever, coupling	RC1-4115-000	Internal components (2 of 6) on page 211
Lever, drive release	RC2-0705-000	Internal components (1 of 6) on page 207
Lever, drive release	RC1-4116-000	Internal components (2 of 6) on page 211
Lever, grounding contact	RC1-4065-000	Internal components (1 of 6) on page 207
Lever, grounding contact	RC1-4066-020	Internal components (1 of 6) on page 207
Lever, sensor	RC1-4027-000	Internal components (3 of 6) on page 215
Lever, sensor	RC1-3939-000	Internal components (5 of 6) on page 219
Link, drive release	RC1-4117-000	Internal components (2 of 6) on page 211
Link, laser shutter	RC1-4125-000	Internal components (1 of 6) on page 207
Link, switch	RC2-0633-000	Internal components (6 of 6) on page 221
Lower paper feed assembly	RM1-3759-000	Internal components (4 of 6) on page 217
Lower transfer guide assembly	RM1-3757-000	Internal components (3 of 6) on page 215
Main drive assembly	RM1-3712-000	Internal components (5 of 6) on page 219
Microswitch (SW501), door	RK2-0534-000	Internal components (6 of 6) on page 221

Table 7-9 Alphabetical parts list (continued)

Description	Part number	Table and page
Motor, DC (M1), main	RK2-1488-000	Internal components (2 of 6) on page 211
Motor, DC, stepping (M2), fusing	RK2-1489-000	Internal components (2 of 6) on page 211
Mount, solenoid	RC2-0498-000	Internal components (6 of 6) on page 221
Multipurpose cover assembly	RM1-3723-000	Covers on page 205
Multipurpose paper pick-up roller assembly	RM1-3716-000	Internal components (3 of 6) on page 215
Multipurpose sensor PCA (PS3)	RM1-4041-000	Internal components (5 of 6) on page 219
Multipurpose tray assembly	RM1-1490-000	Covers on page 205
Oblique roller assembly	RM1-1506-000	Internal components (4 of 6) on page 217
Pad, separation, multipurpose tray	RC1-0939-000	Internal components (3 of 6) on page 215
Paper feed guide assembly	RM1-3760-000	Internal components (4 of 6) on page 217
Paper pick-up assembly	RM1-3762-000	Internal components (5 of 6) on page 219
Paper-width sensor PCA (PS903)	RM1-4042-000	Internal components (4 of 6) on page 217
Pendulum assembly	RM1-3748-000	Internal components (2 of 6) on page 211
Pick-up roller gear assembly	RM1-3714-000	Internal components (5 of 6) on page 219
Pin, dowel	XD3-2120-122	Internal components (2 of 6) on page 211
Plate, anti-magnetic	RC2-0628-000	Internal components (5 of 6) on page 219
Plate, face-up shield	RC2-0697-000	Internal components (6 of 6) on page 221
Plate, fan shield, left	RC2-0623-000	Internal components (1 of 6) on page 207
Plate, grounding	RC1-4085-000	Internal components (4 of 6) on page 217
Plate, inlet/outlet (network models)	RC2-0629-000	Internal components (5 of 6) on page 219
Plate, inlet/outlet (non-network models)	RC2-0638-000	Internal components (5 of 6) on page 219
Plate, protective	RC1-4136-000	Internal components (1 of 6) on page 207
Rear cover assembly	RM1-3724-000	Covers on page 205

Table 7-9 Alphabetical parts list (continued)

Description	Part number	Table and page
Registration assembly	RM1-3715-000	Internal components (3 of 6) on page 215
Ring, E	XD2-1100-402	Internal components (2 of 6) on page 211
Ring, E	XD2-1200-802	Internal components (2 of 6) on page 211
roller stay assembly	RM1-1485-000	Internal components (5 of 6) on page 219
Roller, face-down	RC1-3994-000	Internal components (6 of 6) on page 221
Roller, multipurpose pick-up	RL1-0568-000	Internal components (3 of 6) on page 215
Roller, tray 2 paper pickup	RL1-1370-000	Tray 2 pickup assembly on page 223
Saddle, wire	WT2-5694-000	Internal components (1 of 6) on page 207
Saddle, wire	WT2-5694-000	Internal components (5 of 6) on page 219
Screw, D, M3x8	XA9-1671-000	Internal components (1 of 6) on page 207
Screw, D, M3x8	XA9-1671-000	Internal components (2 of 6) on page 211
Screw, D, M3x8	XA9-1671-000	Internal components (3 of 6) on page 215
Screw, D, M3x8	XA9-1671-000	Internal components (5 of 6) on page 219
Screw, D, M3x8	XA9-1671-000	Internal components (6 of 6) on page 221
Screw, tap, M3x6	XA9-1503-000	Internal components (5 of 6) on page 219
Screw, tapping, truss head, M4x10	XB4-7401-005	Internal components (2 of 6) on page 211
Screw, tapping, truss head, M4x10	XB4-7401-005	Internal components (3 of 6) on page 215
Screw, tapping, truss head, M4x10	XB4-7401-005	Internal components (4 of 6) on page 217
Screw, tapping, truss head, M4x10	XB4-7401-005	Internal components (5 of 6) on page 219
Screw, tapping, truss head, M4x10	XB4-7401-005	Internal components (6 of 6) on page 221
Screw, with washer, M3x6	XB2-7300-605	Internal components (4 of 6) on page 217
Screw, with washer, M3x6	XB2-7300-605	Internal components (5 of 6) on page 219

Table 7-9 Alphabetical parts list (continued)

Description	Part number	Table and page
Sensor-flag assembly	RM1-3769-000	Tray 2 pickup assembly on page 223
Sheet, static charge	RC1-4069-000	Internal components (3 of 6) on page 215
Sheet, static charge	RC1-4070-000	Internal components (3 of 6) on page 215
Solenoid (SL2)	RK2-1492-000	Internal components (6 of 6) on page 221
Solenoid, tray 1 (SL1)	RK2-1490-000	Internal components (5 of 6) on page 219
Spring, compression	RU5-2404-000	Internal components (1 of 6) on page 207
Spring, compression	RU5-2405-000	Internal components (1 of 6) on page 207
Spring, compression	RC1-4140-000	Internal components (1 of 6) on page 207
Spring, compression	RU5-2401-000	Internal components (2 of 6) on page 211
Spring, compression	RU5-2920-000	Internal components (2 of 6) on page 211
Spring, compression	RU5-2408-000	Internal components (3 of 6) on page 215
Spring, compression	RU5-2385-000	Internal components (3 of 6) on page 215
Spring, compression	RC2-0483-000	Internal components (3 of 6) on page 215
Spring, leaf	RC1-4067-000	Internal components (1 of 6) on page 207
Spring, tension	RU5-2388-000	Covers on page 205
Spring, tension	RU5-2407-000	Internal components (1 of 6) on page 207
Spring, tension	RU5-2403-000	Internal components (1 of 6) on page 207
Spring, torsion	RU5-2410-020	Internal components (1 of 6) on page 207
Spring, torsion	RC1-4028-000	Internal components (3 of 6) on page 215
Spring, torsion	RC1-4059-000	Internal components (3 of 6) on page 215
Spring, torsion	RC1-4061-000	Internal components (3 of 6) on page 215
Spring, torsion	RC2-0576-000	Internal components (3 of 6) on page 215

Table 7-9 Alphabetical parts list (continued)

Description	Part number	Table and page
Spring, torsion	RU5-2386-000	Internal components (5 of 6) on page 219
Spring, torsion	RC2-0665-000	Internal components (6 of 6) on page 221
Static wire, fan	RC2-0593-000	Internal components (5 of 6) on page 219
Stay, tag holder	RC1-4126-000	Internal components (1 of 6) on page 207
Stopper, cartridge, left	RC2-0707-000	Internal components (1 of 6) on page 207
Stopper, cartridge, right	RC2-0702-000	Internal components (6 of 6) on page 221
Stopper, feed guide, left	RC2-0585-000	Internal components (1 of 6) on page 207
Stopper, fuser thrust	RC2-0657-000	Internal components (2 of 6) on page 211
Stopper, gear	RC1-4189-000	Internal components (3 of 6) on page 215
Switch, front	RC2-0631-000	Internal components (6 of 6) on page 221
Top cover assembly	RM1-3720-000	Covers on page 205
Top sensor PCA (PS901)	RM1-4040-000	Internal components (4 of 6) on page 217
Transfer roller assembly	RM1-1508-000	Internal components (3 of 6) on page 215
Tray 2 pickup assembly	RM1-3762-000	Tray 2 pickup assembly on page 223
Tray 2 pickup roller assembly	RM1-3763-000	Tray 2 pickup assembly on page 223
Washer, plain	RC2-0652-000	Internal components (2 of 6) on page 211

Numerical parts list

Table 7-10 Numerical parts list

Part number	Description	Table and page
RA0-1003-000	Foot, rubber	Internal components (1 of 6) on page 207
RA0-1003-000	Foot, rubber	Internal components (6 of 6) on page 221
RA0-1172-000	Gear, 17T	Internal components (3 of 6) on page 215
RC1-0922-000	Bushing, transfer, right	Internal components (3 of 6) on page 215
RC1-0939-000	Pad, separation, multipurpose tray	Internal components (3 of 6) on page 215
RC1-3665-000	Bushing	Internal components (6 of 6) on page 221
RC1-3935-000	Guide, feed	Internal components (3 of 6) on page 215
RC1-3936-020	Cover, registration	Internal components (3 of 6) on page 215
RC1-3937-000	Arm, pad	Internal components (3 of 6) on page 215
RC1-3939-000	Lever, sensor	Internal components (5 of 6) on page 219
RC1-3994-000	Roller, face-down	Internal components (6 of 6) on page 221
RC1-4009-000	Holder	Internal components (1 of 6) on page 207
RC1-4025-000	Eliminator, static charge	Internal components (3 of 6) on page 215
RC1-4027-000	Lever, sensor	Internal components (3 of 6) on page 215
RC1-4028-000	Spring, torsion	Internal components (3 of 6) on page 215
RC1-4055-000	Arm, door	Internal components (1 of 6) on page 207
RC1-4056-000	Glide, door	Internal components (1 of 6) on page 207
RC1-4057-000	Hinge, left	Covers on page 205
RC1-4058-000	Hinge, right	Covers on page 205
RC1-4059-000	Spring, torsion	Internal components (3 of 6) on page 215
RC1-4060-000	Lever	Internal components (3 of 6) on page 215

Table 7-10 Numerical parts list (continued)

Part number	Description	Table and page
RC1-4061-000	Spring, torsion	Internal components (3 of 6) on page 215
RC1-4065-000	Lever, grounding contact	Internal components (1 of 6) on page 207
RC1-4066-020	Lever, grounding contact	Internal components (1 of 6) on page 207
RC1-4067-000	Spring, leaf	Internal components (1 of 6) on page 207
RC1-4069-000	Sheet, static charge	Internal components (3 of 6) on page 215
RC1-4070-000	Sheet, static charge	Internal components (3 of 6) on page 215
RC1-4083-000	Guide	Internal components (5 of 6) on page 219
RC1-4085-000	Plate, grounding	Internal components (4 of 6) on page 217
RC1-4096-000	Guide, duplex inlet	Internal components (4 of 6) on page 217
RC1-4108-000	Cover, main motor	Internal components (2 of 6) on page 211
RC1-4114-000	Cam	Internal components (2 of 6) on page 211
RC1-4115-000	Lever, coupling	Internal components (2 of 6) on page 211
RC1-4116-000	Lever, drive release	Internal components (2 of 6) on page 211
RC1-4117-000	Link, drive release	Internal components (2 of 6) on page 211
RC1-4125-000	Link, laser shutter	Internal components (1 of 6) on page 207
RC1-4126-000	Stay, tag holder	Internal components (1 of 6) on page 207
RC1-4127-000	Holder, tag	Internal components (1 of 6) on page 207
RC1-4128-020	Duct, scanner	Internal components (1 of 6) on page 207
RC1-4136-000	Plate, protective	Internal components (1 of 6) on page 207
RC1-4137-020	Cam, contact	Internal components (1 of 6) on page 207
RC1-4140-000	Spring, compression	Internal components (1 of 6) on page 207
RC1-4189-000	Stopper, gear	Internal components (3 of 6) on page 215

Table 7-10 Numerical parts list (continued)

Part number	Description	Table and page
RC2-0468-000	Cushion, right lower	Internal components (6 of 6) on page 221
RC2-0483-000	Spring, compression	Internal components (3 of 6) on page 215
RC2-0492-000	Guide, cartridge upper, right	Internal components (6 of 6) on page 221
RC2-0498-000	Mount, solenoid	Internal components (6 of 6) on page 221
RC2-0559-000	Guide, cassette, front right	Internal components (6 of 6) on page 221
RC2-0560-000	Guide, cassette, rear right	Internal components (6 of 6) on page 221
RC2-0561-000	Guide, center plate, right	Internal components (6 of 6) on page 221
RC2-0562-000	Holder, option connector	Internal components (6 of 6) on page 221
RC2-0565-000	Guide, cassette, front left	Internal components (1 of 6) on page 207
RC2-0566-000	Guide, cassette, rear left	Internal components (1 of 6) on page 207
RC2-0567-000	Guide, centerplate, left	Internal components (1 of 6) on page 207
RC2-0575-000	Arm, paper-width sensor	Internal components (3 of 6) on page 215
RC2-0576-000	Spring, torsion	Internal components (3 of 6) on page 215
RC2-0579-000	Cover, gear	Internal components (2 of 6) on page 211
RC2-0585-000	Stopper, feed guide, left	Internal components (1 of 6) on page 207
RC2-0588-000	Holder, cable	Internal components (5 of 6) on page 219
RC2-0590-000	Duct, cartridge	Internal components (2 of 6) on page 211
RC2-0592-000	Holder, fan	Internal components (5 of 6) on page 219
RC2-0593-000	Static wire, fan	Internal components (5 of 6) on page 219
RC2-0595-000	Holder, interlock	Internal components (6 of 6) on page 221
RC2-0602-000	Cover, DIMM	Covers on page 205
RC2-0603-000	Cover, right lower	Covers on page 205
RC2-0605-000	Cover, right upper	Covers on page 205

Table 7-10 Numerical parts list (continued)

Part number	Description	Table and page
RC2-0612-000	Cover, engine controller	Covers on page 205
RC2-0622-000	Holder, fan, left	Internal components (1 of 6) on page 207
RC2-0623-000	Plate, fan shield, left	Internal components (1 of 6) on page 207
RC2-0627-000	Cover, formatter	Internal components (5 of 6) on page 219
RC2-0628-000	Plate, anti-magnetic	Internal components (5 of 6) on page 219
RC2-0629-000	Plate, inlet/outlet (network models)	Internal components (5 of 6) on page 219
RC2-0631-000	Switch, front	Internal components (6 of 6) on page 221
RC2-0632-000	Holder, switch	Internal components (6 of 6) on page 221
RC2-0633-000	Link, switch	Internal components (6 of 6) on page 221
RC2-0634-000	Holder, switch link	Internal components (6 of 6) on page 221
RC2-0638-000	Plate, inlet/outlet (non-network models)	Internal components (5 of 6) on page 219
RC2-0648-000	Guide, air	Internal components (2 of 6) on page 211
RC2-0649-000	Film, fuser drive side plate	Internal components (2 of 6) on page 211
RC2-0652-000	Washer, plain	Internal components (2 of 6) on page 211
RC2-0657-000	Stopper, fuser thrust	Internal components (2 of 6) on page 211
RC2-0665-000	Spring, torsion	Internal components (6 of 6) on page 221
RC2-0697-000	Plate, face-up shield	Internal components (6 of 6) on page 221
RC2-0700-000	Guide, cartridge lower, right	Internal components (6 of 6) on page 221
RC2-0701-000	Bushing, inner	Internal components (2 of 6) on page 211
RC2-0702-000	Stopper, cartridge, right	Internal components (6 of 6) on page 221
RC2-0703-000	Guide, cartridge upper, left	Internal components (1 of 6) on page 207
RC2-0704-000	Guide, cartridge lower, left	Internal components (1 of 6) on page 207

Table 7-10 Numerical parts list (continued)

Part number	Description	Table and page
RC2-0705-000	Lever, drive release	Internal components (1 of 6) on page 207
RC2-0706-000	Lever, cartridge clamp	Internal components (1 of 6) on page 207
RC2-0707-000	Stopper, cartridge, left	Internal components (1 of 6) on page 207
RK2-0534-000	Microswitch (SW501), door	Internal components (6 of 6) on page 221
RK2-1488-000	Motor, DC (M1), main	Internal components (2 of 6) on page 211
RK2-1489-000	Motor, DC, stepping (M2), fusing	Internal components (2 of 6) on page 211
RK2-1490-000	Solenoid, tray 1 (SL1)	Internal components (5 of 6) on page 219
RK2-1492-000	Solenoid (SL2)	Internal components (6 of 6) on page 221
RK2-1497-000	Fan, right (FM1)	Internal components (5 of 6) on page 219
RK2-1499-000	Fan, left	Internal components (1 of 6) on page 207
RL1-0568-000	Roller, multipurpose pick-up	Internal components (3 of 6) on page 215
RL1-1367-000	Cover, right front	Covers on page 205
RL1-1370-000	Roller, tray 2 paper pickup	Tray 2 pickup assembly on page 223
RM1-1485-000	roller stay assembly	Internal components (5 of 6) on page 219
RM1-1490-000	Multipurpose tray assembly	Covers on page 205
RM1-1497-000	Delivery roller assembly	Internal components (6 of 6) on page 221
RM1-1506-000	Oblique roller assembly	Internal components (4 of 6) on page 217
RM1-1508-000	Transfer roller assembly	Internal components (3 of 6) on page 215
RM1-1521-030	Laser/scanner assembly	Internal components (1 of 6) on page 207
RM1-1522-000	Drive release assembly	Internal components (2 of 6) on page 211
RM1-3712-000	Main drive assembly	Internal components (5 of 6) on page 219
RM1-3714-000	Pick-up roller gear assembly	Internal components (5 of 6) on page 219
RM1-3715-000	Registration assembly	Internal components (3 of 6) on page 215

Table 7-10 Numerical parts list (continued)

Part number	Description	Table and page
RM1-3716-000	Multipurpose paper pick-up roller assembly	Internal components (3 of 6) on page 215
RM1-3720-000	Top cover assembly	Covers on page 205
RM1-3721-000	Left cover assembly	Covers on page 205
RM1-3722-000	Cartridge-door assembly	Covers on page 205
RM1-3723-000	Multipurpose cover assembly	Covers on page 205
RM1-3724-000	Rear cover assembly	Covers on page 205
RM1-3725-000	Control-panel assembly	Covers on page 205
RM1-3727-000	Bottom plate roller assembly	Internal components (6 of 6) on page 221
RM1-3730-000	Engine controller assembly — 110–127V	Internal components (5 of 6) on page 219
RM1-3731-000	Engine controller assembly — 220–240V	Internal components (5 of 6) on page 219
RM1-3740-000	Fuser assembly (110-127V)	Internal components (5 of 6) on page 219
RM1-3741-000	Fuser assembly (220-240V)	Internal components (5 of 6) on page 219
RM1-3742-000	Face down full flag, right	Covers on page 205
RM1-3743-000	Face down full flag, left	Covers on page 205
RM1-3746-000	Fuser drive assembly	Internal components (2 of 6) on page 211
RM1-3748-000	Pendulum assembly	Internal components (2 of 6) on page 211
RM1-3749-000	Face-down roller assembly	Internal components (6 of 6) on page 221
RM1-3757-000	Lower transfer guide assembly	Internal components (3 of 6) on page 215
RM1-3758-000	High-voltage PCA	Internal components (4 of 6) on page 217
RM1-3759-000	Lower paper feed assembly	Internal components (4 of 6) on page 217
RM1-3760-000	Paper feed guide assembly	Internal components (4 of 6) on page 217
RM1-3762-000	Paper pick-up assembly	Internal components (5 of 6) on page 219
RM1-3762-000	Tray 2 pickup assembly	Tray 2 pickup assembly on page 223
RM1-3763-000	Tray 2 pickup roller assembly	Tray 2 pickup assembly on page 223
RM1-3769-000	Sensor-flag assembly	Tray 2 pickup assembly on page 223

Table 7-10 Numerical parts list (continued)

Part number	Description	Table and page
RM1-4040-000	Top sensor PCA (PS901)	Internal components (4 of 6) on page 217
RM1-4041-000	Multipurpose sensor PCA (PS3)	Internal components (5 of 6) on page 219
RM1-4042-000	Paper-width sensor PCA (PS903)	Internal components (4 of 6) on page 217
RM1-4053-000	Cable, scanner motor	Internal components (1 of 6) on page 207
RM1-4054-000	Cable, memory tag	Internal components (1 of 6) on page 207
RM1-4057-000	Cable, paper delivery sensor	Internal components (3 of 6) on page 215
RM1-4060-000	Cable, tray 2 sensor	Tray 2 pickup assembly on page 223
RM1-4062-000	Cable, option interface	Internal components (6 of 6) on page 221
RU5-0366-000	Gear, 30T	Internal components (3 of 6) on page 215
RU5-0394-000	Gear, 12T	Internal components (2 of 6) on page 211
RU5-0400-000	Gear, 12T	Internal components (3 of 6) on page 215
RU5-0409-000	Gear, 14T	Internal components (3 of 6) on page 215
RU5-0950-000	Gear, 201T	Internal components (2 of 6) on page 211
RU5-0951-000	Gear, 16T	Internal components (2 of 6) on page 211
RU5-0955-000	Gear, 43T	Internal components (2 of 6) on page 211
RU5-0956-000	Gear, 20T/20T	Internal components (2 of 6) on page 211
RU5-0957-000	Gear, 20T	Internal components (2 of 6) on page 211
RU5-0958-000	Gear, 17T/17T	Internal components (2 of 6) on page 211
RU5-0959-000	Gear, 19T	Internal components (2 of 6) on page 211
RU5-0960-000	Gear, 31T	Internal components (2 of 6) on page 211
RU5-0962-000	Gear, 65T	Internal components (2 of 6) on page 211
RU5-2385-000	Spring, compression	Internal components (3 of 6) on page 215

Table 7-10 Numerical parts list (continued)

Part number	Description	Table and page
RU5-2386-000	Spring, torsion	Internal components (5 of 6) on page 219
RU5-2388-000	Spring, tension	Covers on page 205
RU5-2401-000	Spring, compression	Internal components (2 of 6) on page 211
RU5-2403-000	Spring, tension	Internal components (1 of 6) on page 207
RU5-2404-000	Spring, compression	Internal components (1 of 6) on page 207
RU5-2405-000	Spring, compression	Internal components (1 of 6) on page 207
RU5-2407-000	Spring, tension	Internal components (1 of 6) on page 207
RU5-2408-000	Spring, compression	Internal components (3 of 6) on page 215
RU5-2410-020	Spring, torsion	Internal components (1 of 6) on page 207
RU5-2920-000	Spring, compression	Internal components (2 of 6) on page 211
VS1-7177-003	Connector, snap tight, bk	Internal components (1 of 6) on page 207
VS1-7177-004	Connector, snap tight, bk	Internal components (6 of 6) on page 221
VS1-7257-007	Connector, drawer	Internal components (6 of 6) on page 221
WE8-5516-000	Ferrite core	Internal components (2 of 6) on page 211
WG8-5624-000	IC, photo interrupter (PS1)	Internal components (6 of 6) on page 221
WG8-5624-000	IC, photo interrupter (PS3)	Tray 2 pickup assembly on page 223
WT2-5056-000	Clip, cable	Internal components (6 of 6) on page 221
WT2-5678-000	Clip, cable	Internal components (5 of 6) on page 219
WT2-5678-000	Clip, cable	Internal components (6 of 6) on page 221
WT2-5694-000	Saddle, wire	Internal components (1 of 6) on page 207
WT2-5694-000	Saddle, wire	Internal components (5 of 6) on page 219
WT2-5812-000	Clip, cable	Internal components (1 of 6) on page 207

Table 7-10 Numerical parts list (continued)

Part number	Description	Table and page
XA9-1503-000	Screw, tap, M3x6	Internal components (5 of 6) on page 219
XA9-1671-000	Screw, D, M3x8	Internal components (1 of 6) on page 207
XA9-1671-000	Screw, D, M3x8	Internal components (2 of 6) on page 211
XA9-1671-000	Screw, D, M3x8	Internal components (3 of 6) on page 215
XA9-1671-000	Screw, D, M3x8	Internal components (5 of 6) on page 219
XA9-1671-000	Screw, D, M3x8	Internal components (6 of 6) on page 221
XB2-7300-605	Screw, with washer, M3x6	Internal components (4 of 6) on page 217
XB2-7300-605	Screw, with washer, M3x6	Internal components (5 of 6) on page 219
XB4-7401-005	Screw, tapping, truss head, M4x10	Internal components (2 of 6) on page 211
XB4-7401-005	Screw, tapping, truss head, M4x10	Internal components (3 of 6) on page 215
XB4-7401-005	Screw, tapping, truss head, M4x10	Internal components (4 of 6) on page 217
XB4-7401-005	Screw, tapping, truss head, M4x10	Internal components (5 of 6) on page 219
XB4-7401-005	Screw, tapping, truss head, M4x10	Internal components (6 of 6) on page 221
XD2-1100-402	Ring, E	Internal components (2 of 6) on page 211
XD2-1200-802	Ring, E	Internal components (2 of 6) on page 211
XD3-2120-122	Pin, dowel	Internal components (2 of 6) on page 211